WBLNA Series — WIDE BAND AMPLIFIER

Features :

- Frequency Range : 50 – 2500MHz
- PGA-103+ MMIC based amplifier
- High dynamic range
- Noise Figure :
- SMA Connector

Picture :

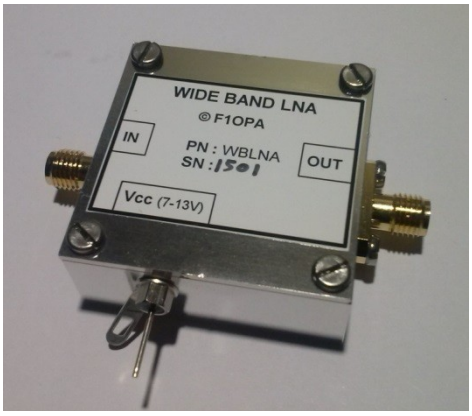

Description:

WBLNA is a good compromise between low noise, gain and high dynamic range.
It can be used from 50MHz to 1500MHz for low noise applications and up to 2500MHz for amplification stage.

Electrical Specifications @ +25 °C, ZS = ZL = 50

Parameter	Unit	Minimum	Typical	Maximum
Frequency	**MHz**	50		2500
Gain @ 50MHz Gain @ 144MHz Gain @ 432 MHz Gain @1296MHz Gain@ 2350MHz	**dB**		26 25 22 14 10	
P sat	**dBm**	20	21	22
Noise Figure @ 50MHz Noise Figure @ 144MHz Noise Figure @ 432MHz Noise Figure @ 1296MHz	**dB**		0.35 0.4 0.45 0.7	
DC Power Supply	**V**	5		13
Supply current	**mA**			120
Input/output impedance	**Ohm**		50	

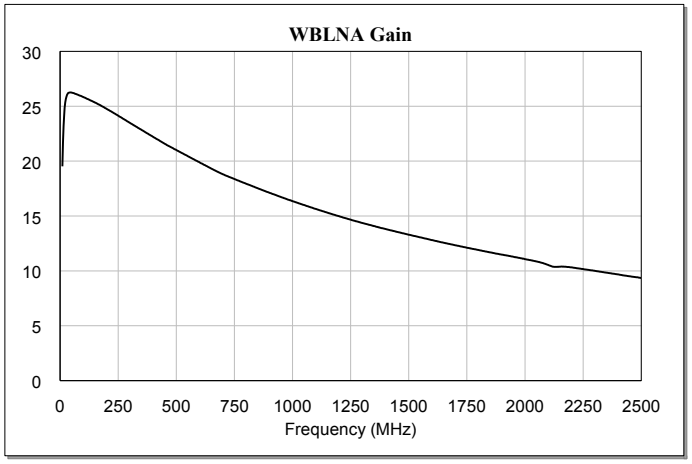
WBLNA Gain
30
25
20
15
10
5
0
0 250 500 750 1000 1250 1500 1750 2000 2250 2500
Frequency (MHz)

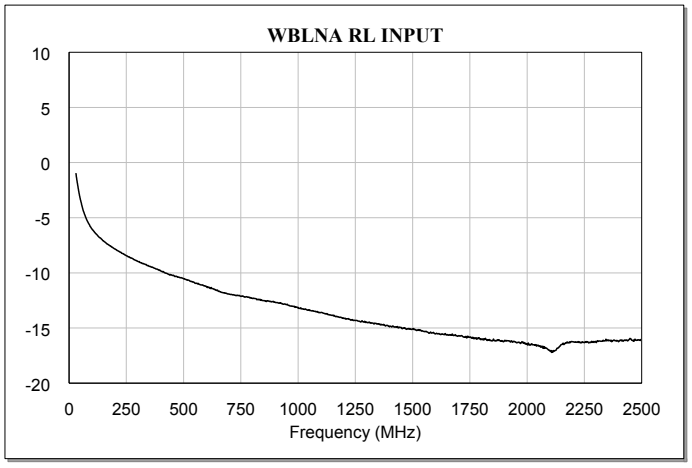
WBLNA RL INPUT
10
5
0
-5
-10
-15
-20
0 250 500 750 1000 1250 1500 1750 2000 2250 2500
Frequency (MHz)

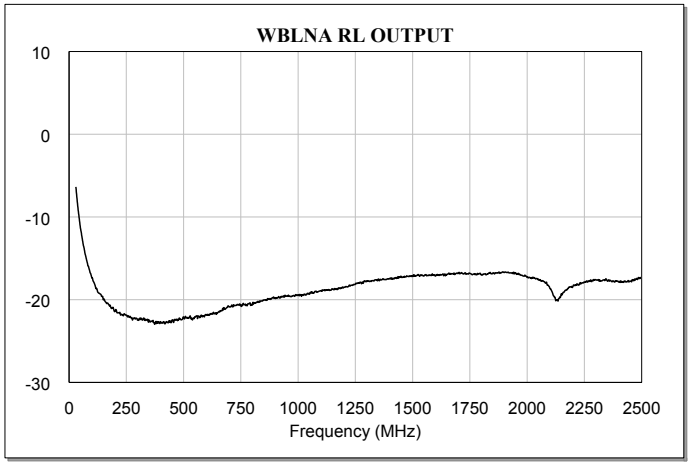
WBLNA RL OUTPUT
10
0
-10
-20
-30
0 250 500 750 1000 1250 1500 1750 2000 2250 2500
Frequency (MHz)

Absolute Maximum Ratings

Parameter	Absolute Maximum
RF Input Power	+18dBm
DC Input Power	14V
Operating Temperature	-20°C to +85°C
Storage Temperature	-40°C to +85°C

Outline

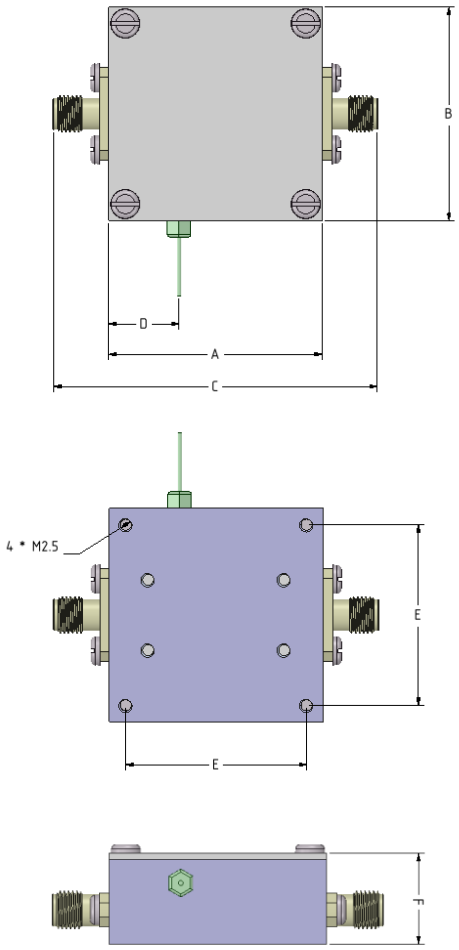

	A	B	C	D	E	F
mm	36.4	36.4	55.2	18.2	30.8	15